EC1

MINCER & HOPPER MODULE

COMPLEMENTARY MODULE FOR THE EC1-A DERINDER WITH SUCTION SYSTEM



PRESENTATION

This module consists of a mincer, which connects directly to the derinder, a hopper to collect shavings, and a suction system.

The hopper is used to collect shavings into a container. A wide variety of containers can be used, including frame pallets, boxes, bags, and many others. The resulting waste is compact and allows the filling rate to be increased by up to 400%.



BASE MODULE

The module's main components are a mincer and a hopper

Both the mincer and the hopper are made of stainless steel. The module itself is stable, resistant and easy to maintain. Components are connected using ø70mm silicone tubes

The hopper ensures waste is constantly collected. It is positioned at the right height to accommodate most waste containers used in the industry



OPTIONAL CARROUSEL SYSTEM

The optional carousel system is an extremely practical solution for collecting waste into bags

Designed to hold up to five 30 L bags weighing between 10 and 15 kg

Greatly facilitates waste management

DIMENSIONS

Measures in mm

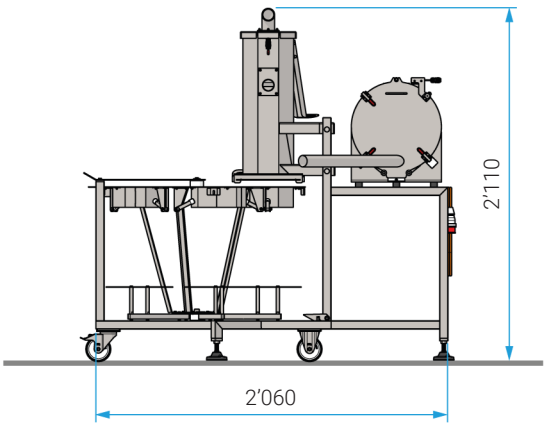

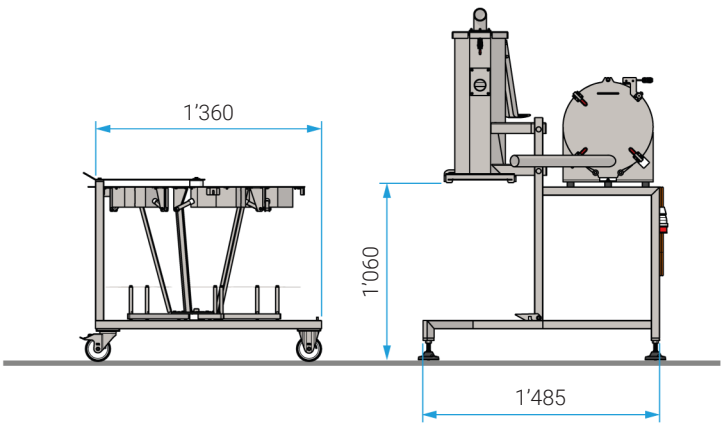

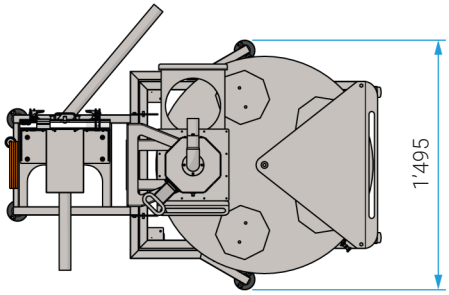

System can be tilted to facilitate cleaning

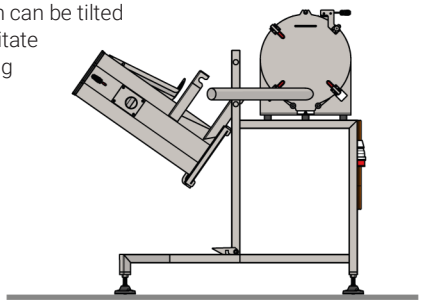

JNJ automation SA
Impasse de la Maladaire 5 | CH-1680 Romont | Tél +41 26 656 9000 | info@jnj.swiss | www.jnj.swiss

© JNJ automation SA, all rights reserved. The products and specifications in this document are subject to change at any time without notice. Last update : 14/06/2024